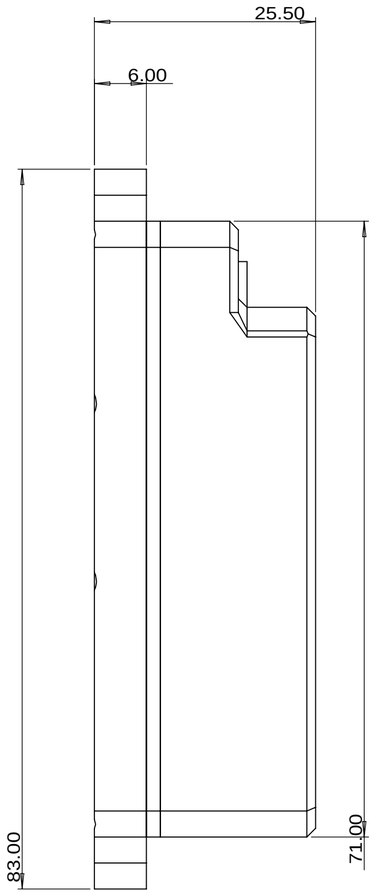

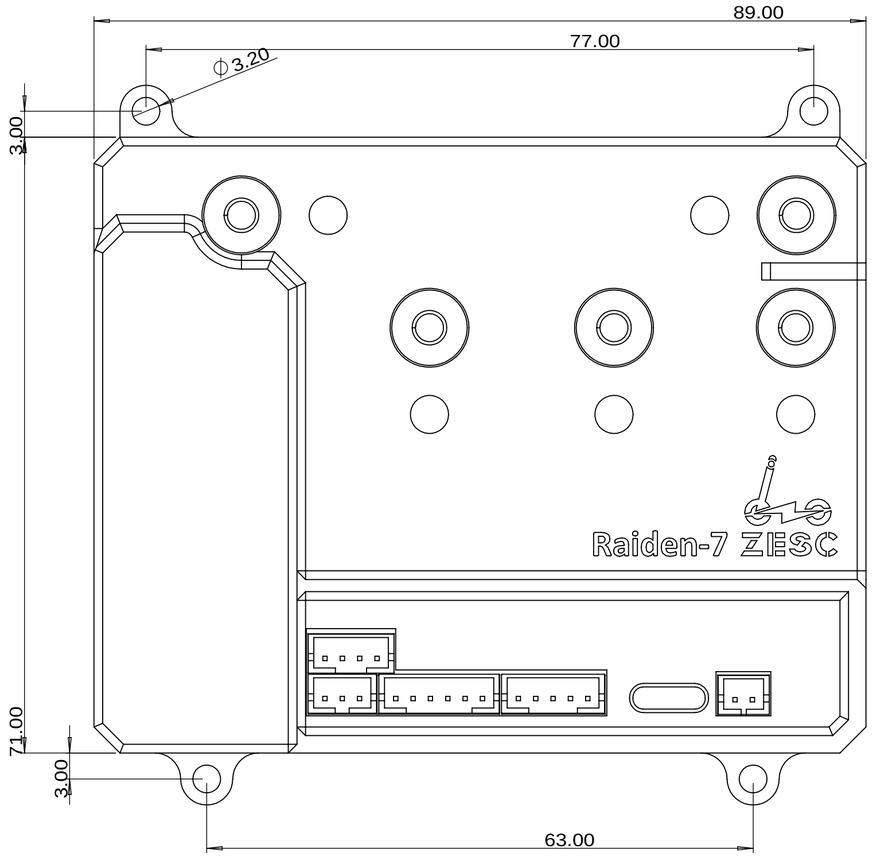

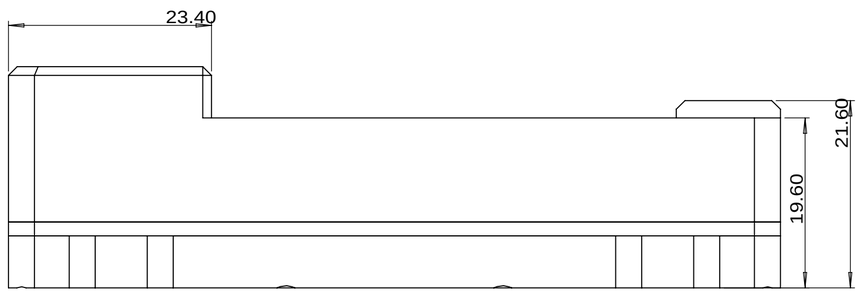

Raiden-7

release 2021/04/27